THIS COPY IS PROVIDED ON A RESTRICTED BASIS AND IS NOT TO BE USED IN ANY WAY DETRIMENTAL TO THE INTERESTS OF PANDUIT CORP.

PANDUIT PART NUMBER	STUD SIZE	DIMENSIONS in.				
		A ±.040	W ±.010	C ±.020	M ±.040	H ±.010
PN10-6LF-2K	#6	1.02 (25.91)	.30 (7.62)	.21 (5.33)	.79 (20.07)	.14 (3.56)
PN10-8LF-2K	#8	1.05 (26.67)	.30 (7.62)	.21 (5.33)	.79 (20.07)	.16 (4.06)
PN10-10LF-2K	#10	1.05 (26.67)	.34 (8.64)	.21 (5.33)	.79 (20.07)	.19 (4.83)

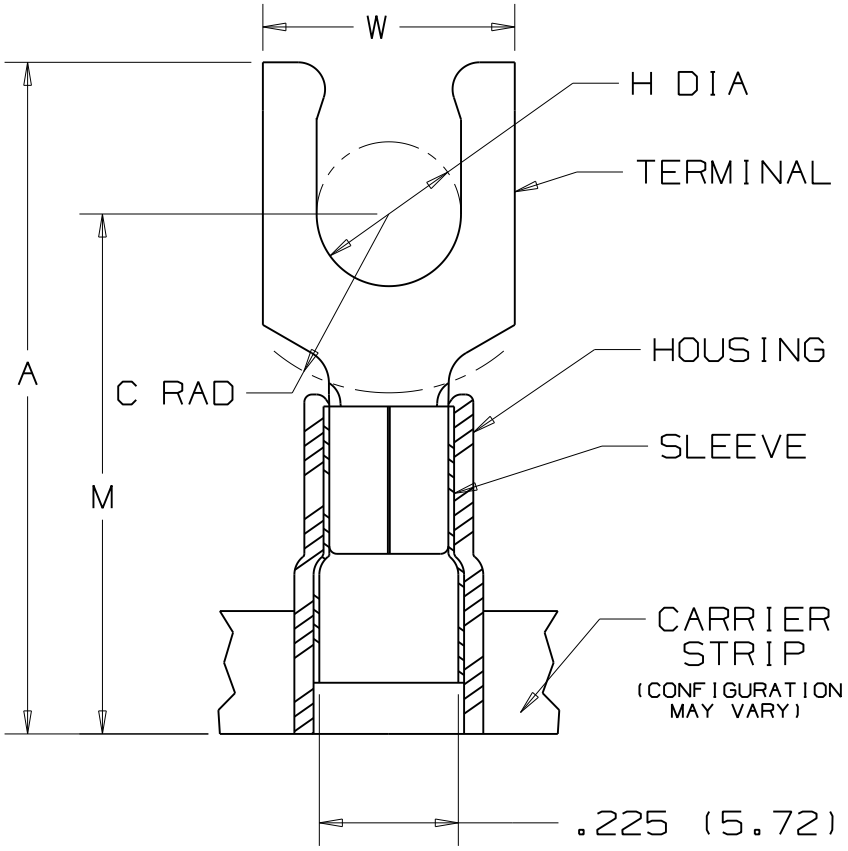

NOTES :

1. UL LISTED AND CSA CERTIFIED FOR :
   A. 600 V MAX. VOLTAGE RATING
   B. 221°F (105°C) MAX. TEMP. RATING
   C. #12-10 AWG (2.5-6.0 mm²) SOLID OR STRANDED, COPPER WIRE
2. PACKAGE QTY. : 2K = 2000 PCS. CONTINUOUS MOLDED CARRIER STRIP
3. MATERIAL :
   A. STAMPING - .04" THK COPPER, TIN PLATED
   B. HOUSING - YELLOW NYLON
   C. SLEEVE - BRASS, TIN PLATED
4. DIMENSIONS IN BRACKETS ARE IN MILLIMETERS
5. INSTALLATION TOOLS :
   A. PRESSES - CP-851, CP-860, CP-861
   B. APPLICATOR - CA-800
   C. DIE INSERTS - CD-800-3
6. WIRE STRIP LENGTH: $9/32^{+1/32}_{-0}$ ($7.1^{+0.8}_{-0}$)

LISTED 587H E52164

CERTIFIED LR31212

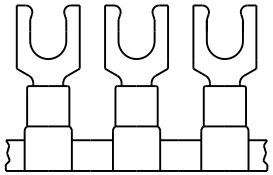

REV	DATE	BY	CHK	DESCRIPTION	ECN	CUST	PM
06	11/07	SRB		Removed part #PN10-14LF-2K Part Obsoleted			

PANDUIT CORP. TINLEY PARK, ILLINOIS

TERMO 3PC. CONTINUOUSLY MOLDED NYLON INSULATED, 12-10 BARREL, LOCKING FORKS

DRAWN BY	CHK'D	SCALE	DRAWING NO.
JMV	LA	NONE	A41101